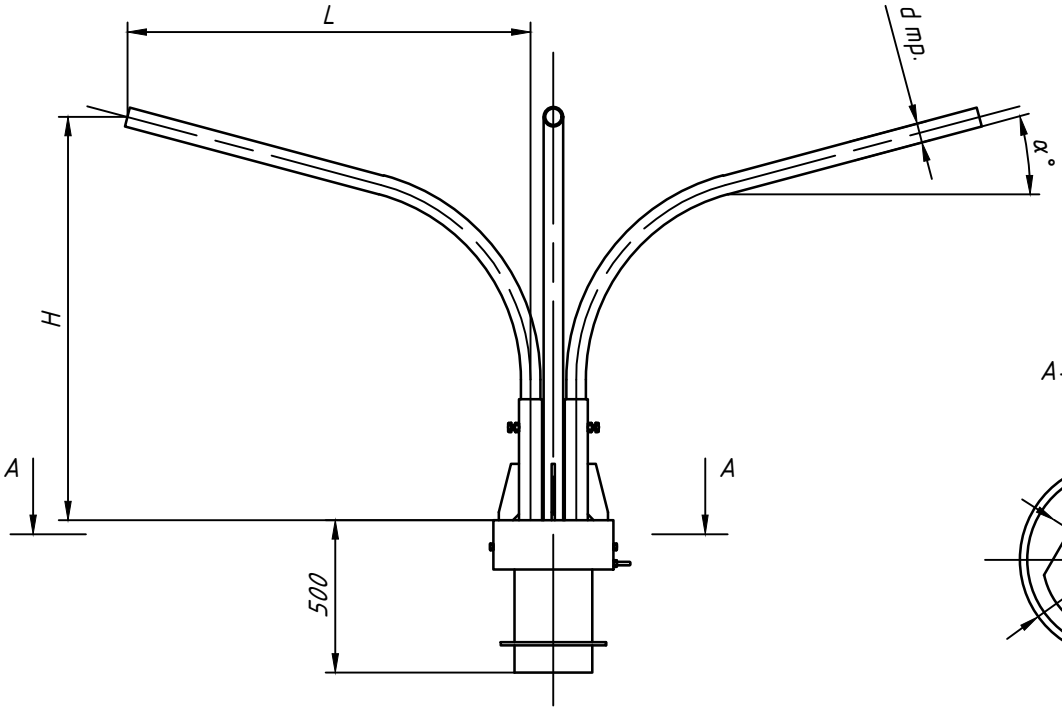
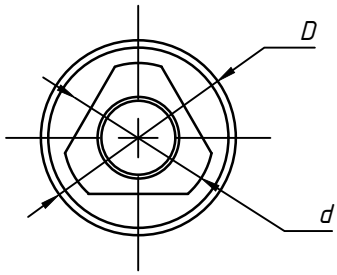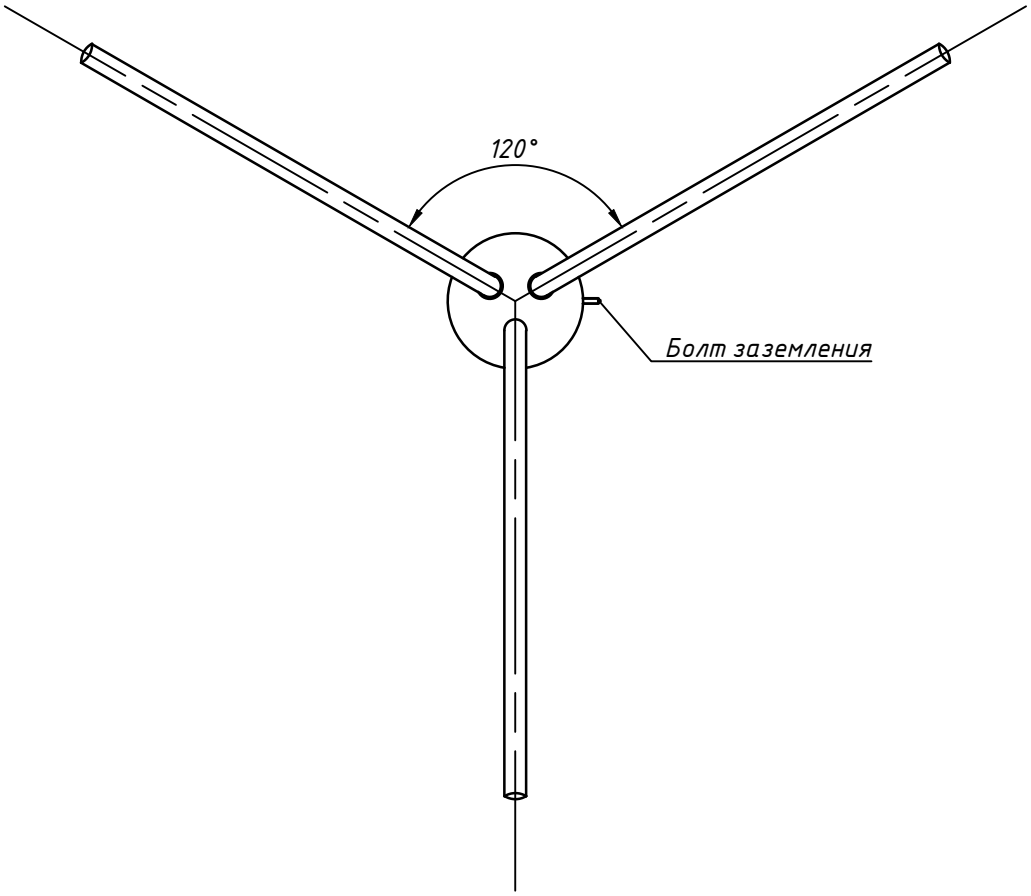
A–A (M1:10)